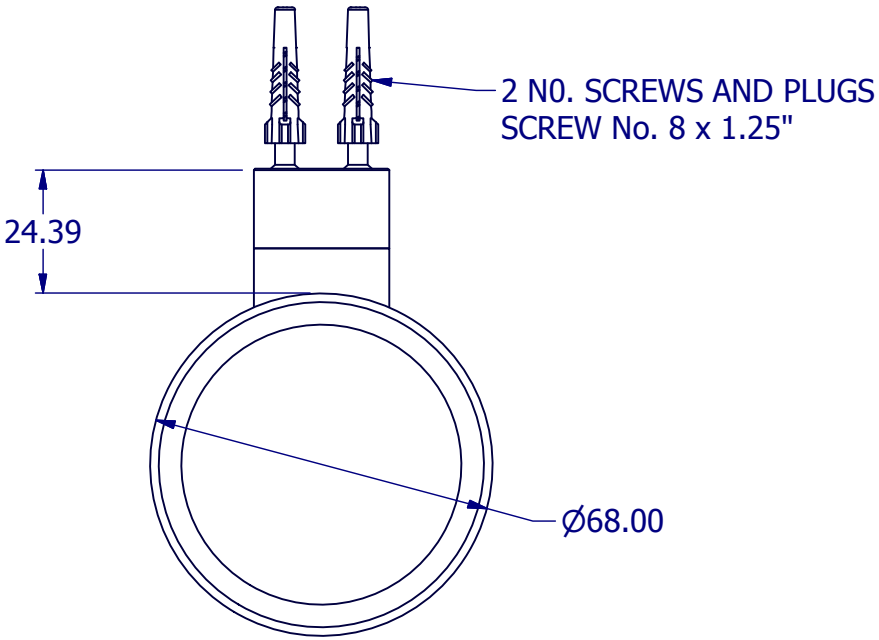

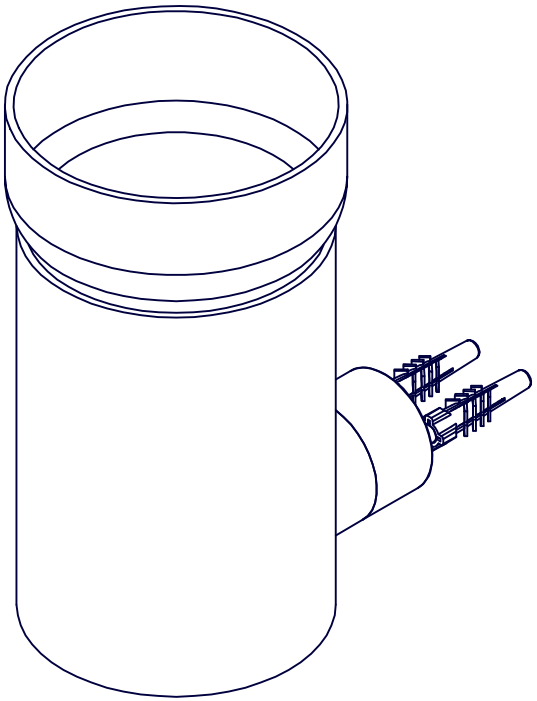

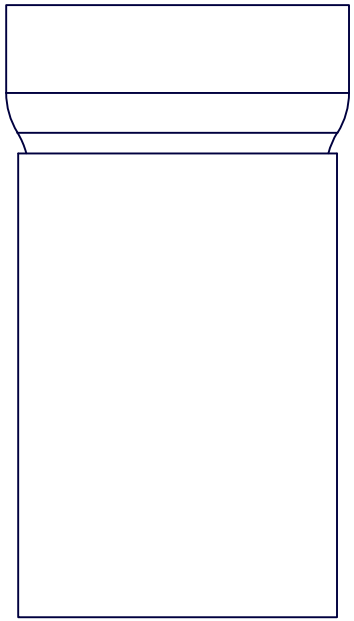

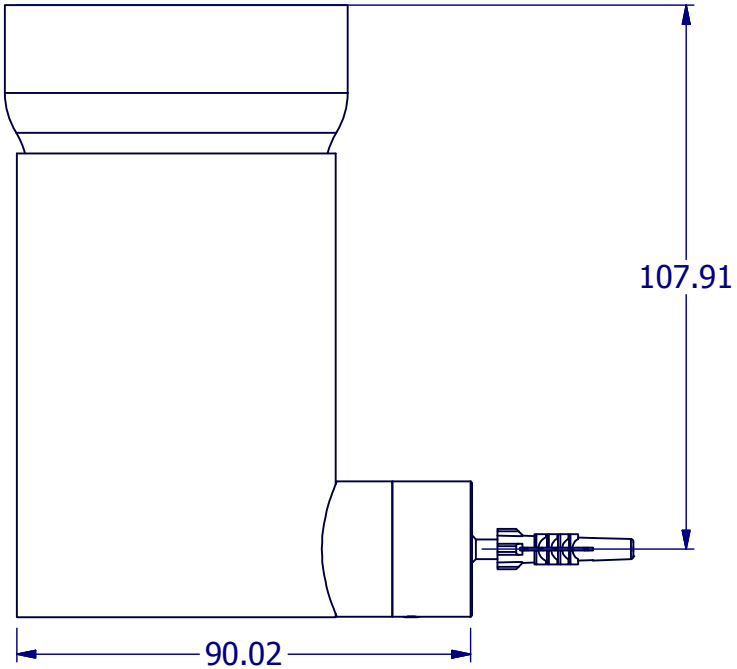

A4	DRG No	N5045	ISSUE NO.	A	ISSUE DATE	11/02/13