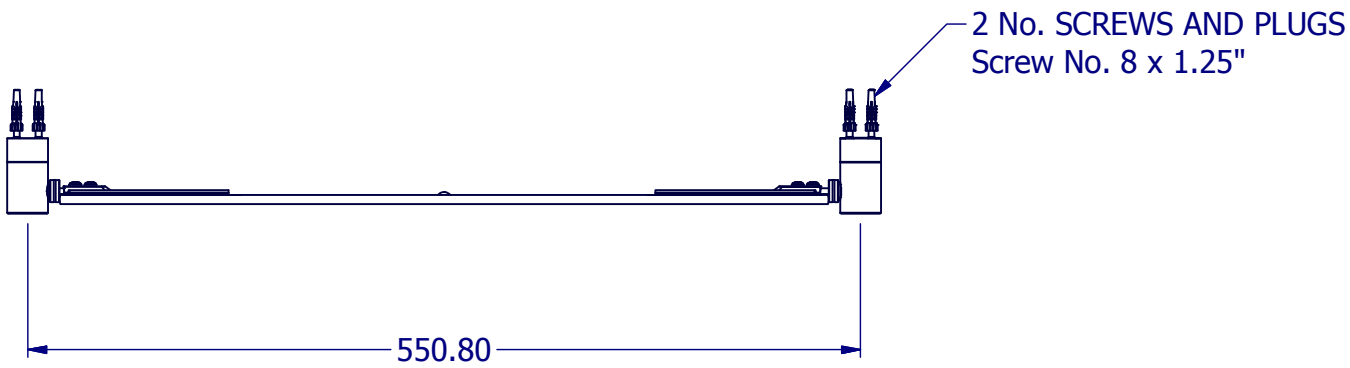

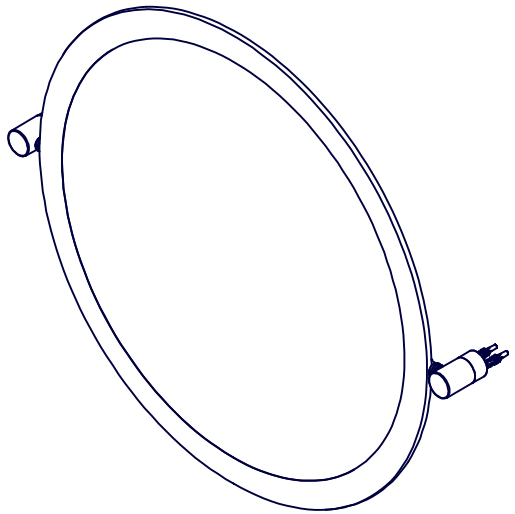

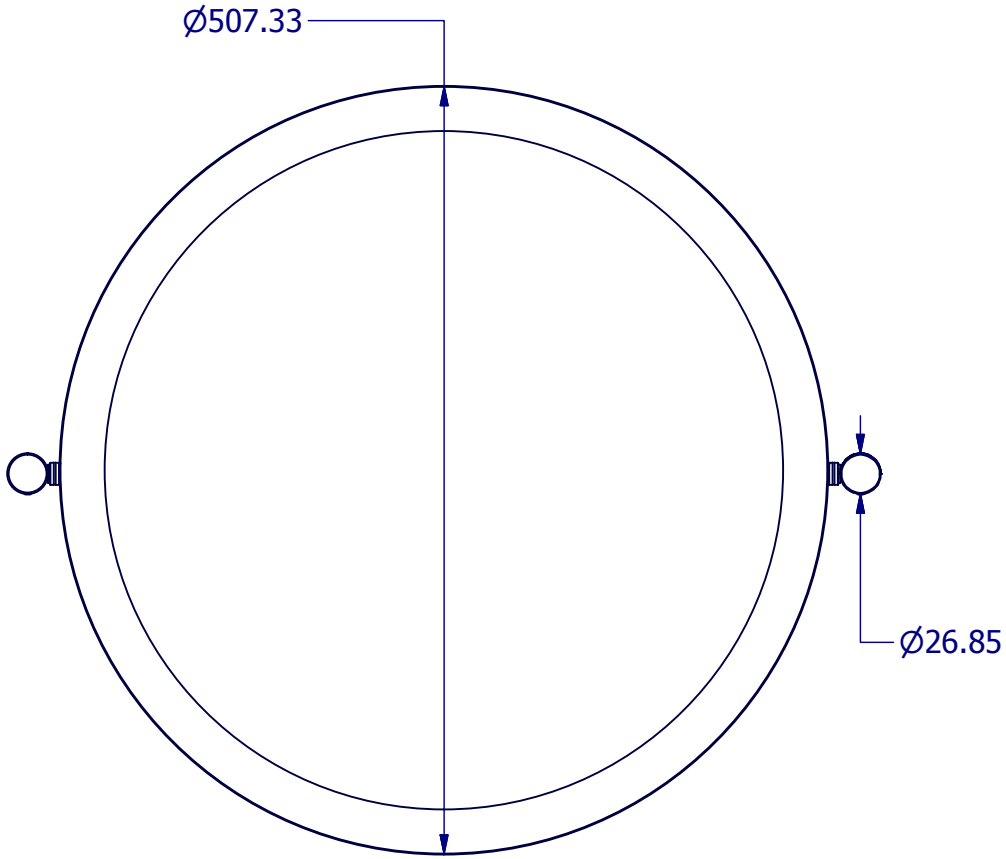

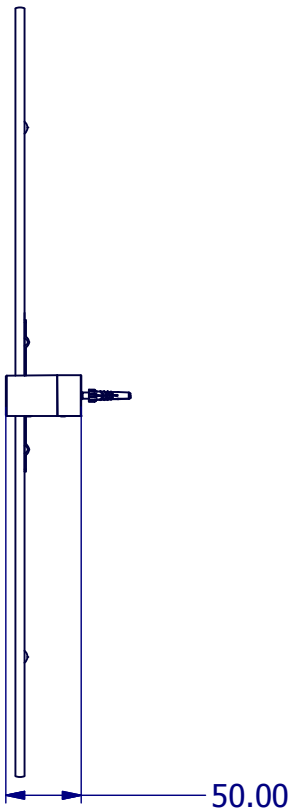

A4	DRG No	L5145	ISSUE NO.	A	ISSUE DATE	28/0213