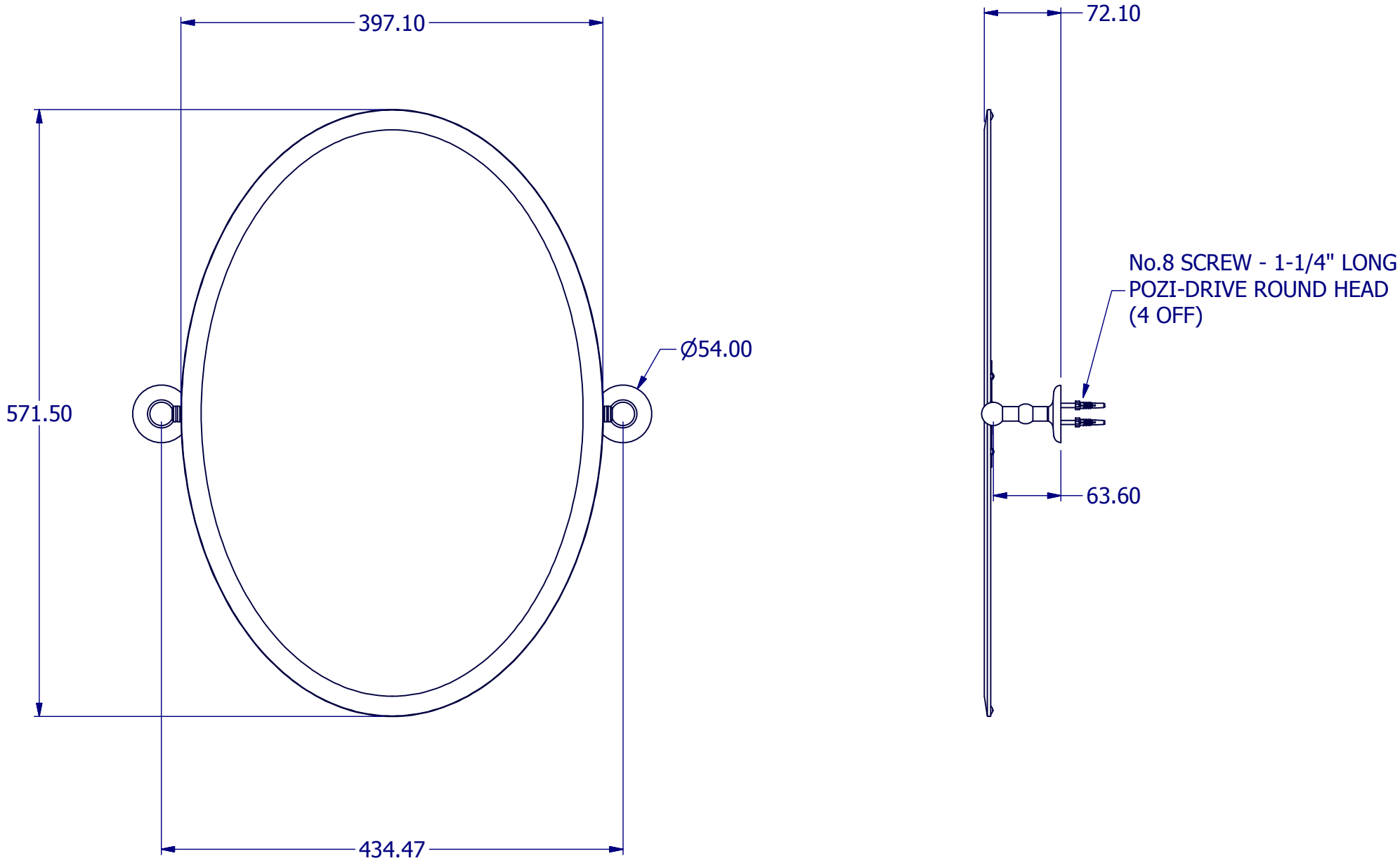

A4	DRG No	L1146	ISSUE NO.	A	ISSUE DATE	22/06/12