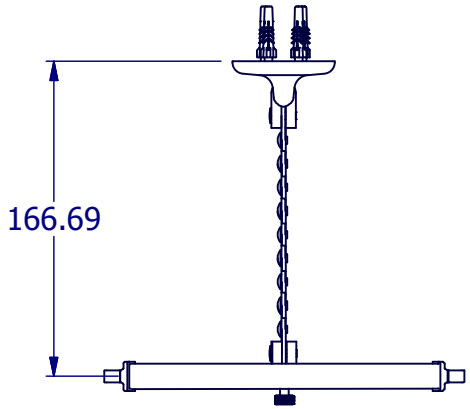


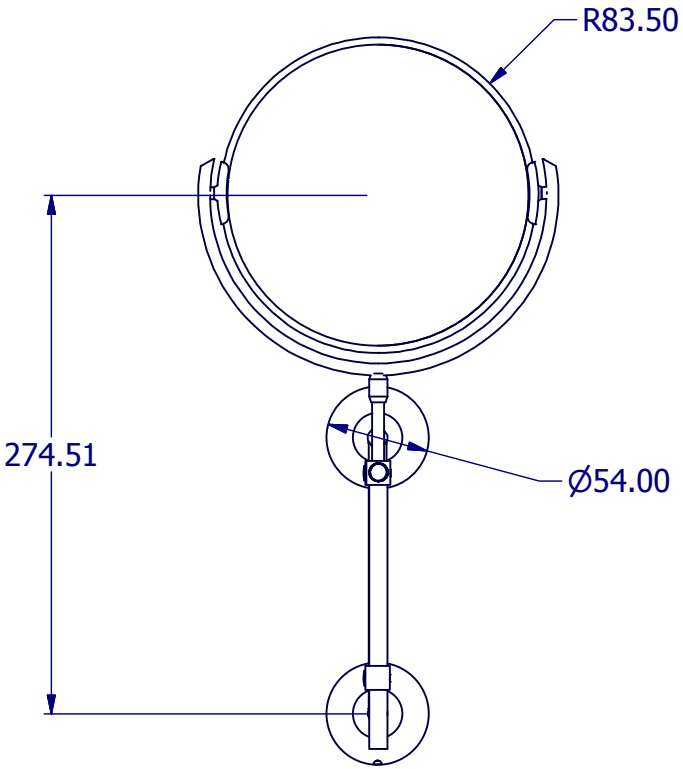


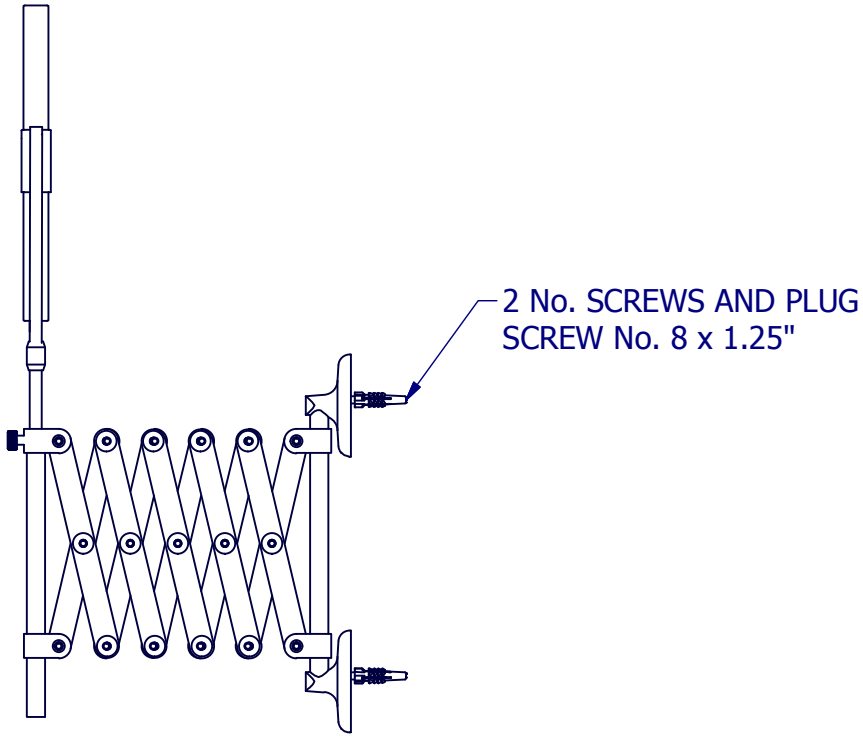


| A4 | DRG No | L1108 | ISSUE NO. | A | ISSUE DATE | 24/01/13 |
|---|---|---|---|---|---|---|